SANGIORGIO

H6 washer, 9 kg
Model: H914-T
Type: H914

ECO
Inverter Motor

G → A

MAIN CHARACTERISTICS

- Electronic controller
- Inverter motor
- Delayed start (1 - 24 hours)
- Spin speed adjustment
- Temperature adjustment
- Eco silence
- Stain level adjustment
- Programme progress indicator
- Self-regulation of water consumption
- Self-load balancing during spinning

TECHNICAL DATA

Product type: stand alone
Load capacity: 9 kg
Maximum spin speed: 1400 rpm
Product dimensions: 842 x 595 x 561 mm
Dimensions with packaging: 880 x 634 x 620 mm
Net Weight: 75 kg
Gross Weight: 76 kg
Drum volume (litres): 64 litres
Drum diameter: 493 mm
Adjustable feet: Yes
Porthole: Type 10, smoked cover
Colour: White
Door opening angle: 150°
Porthole diameter: 486 mm
Nominal data electrical connection: 2200 W
Current: 10A
Voltage: 220 - 240V
Frequency: 50-60Hz
Certification: VDE

CONTROL PANEL

- Full touch buttons
- Digital displays
- Remaining time
- Programme progress indicator
- Washing end buzzer
- Wifi

Safety

- Child safety lock
- Time to end
- Anti-overflow
- Anti-foam
- Overheating control

ADDITIONAL OPTIONS

- Pre-wash
- Soak
- Rinse hold
- Extra rinse
- Steam
- Half load
- 2 selectable stain levels
- Silent wash
- Eco

WASHING PROGRAMMES

1. Cotton
2. Eco 40-60
3. Synthetic
4. Rapid 15’
5. Delicate
6. Duvet
7. Infant
8. Self-clean
9. Jeans/Coloured
10. Mix 60’
11. Curtain
12. Wool
13. Steam
14. Rinse
15. Drain/Spin

CONSUMPTION DATA

- Energy efficiency class[1]: A
- Energy[2]: 49 kWh/year
- Loading capacity: 9 kg
- Programme duration[3]: 228 min/cycle
- Airborne noise emission: 76 dB
- Noise efficiency class[4]: B
- Spin efficiency class[5]: B
- Standard Eco programme water consumption per cycle: 50L

[1] On a scale of energy efficiency classes from A to G
[2] Annual weighted energy consumption in kWh, based on 100 wash cycles with reference programme, in full load and half load mode.
[3] Weighted duration of the reference programme at full load and half load.
[4] On a scale of efficiency classes from A to G
[5] On a scale of efficiency classes from A to D
* Data relating to regulation (EU) 2019/2014
** Average values on the various programs
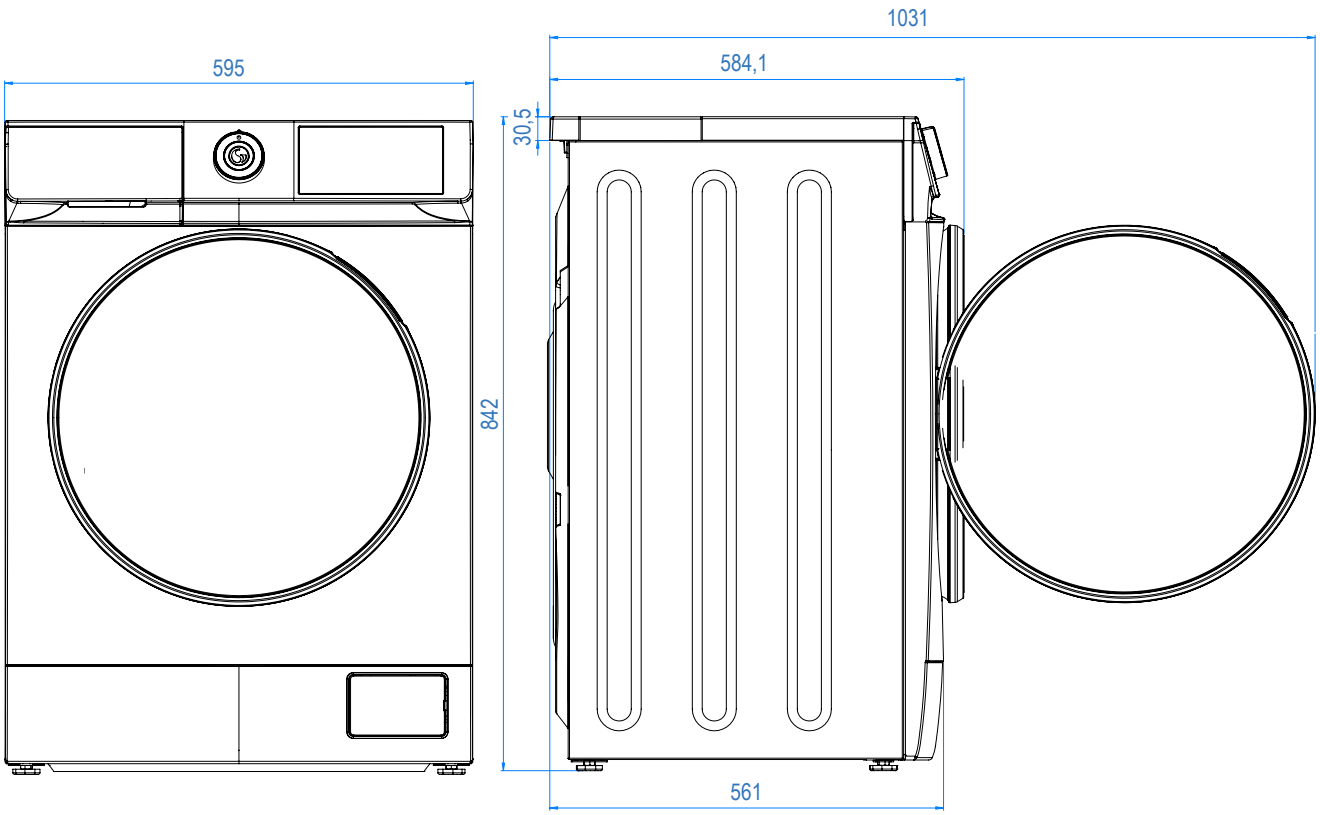
DIMENSIONS